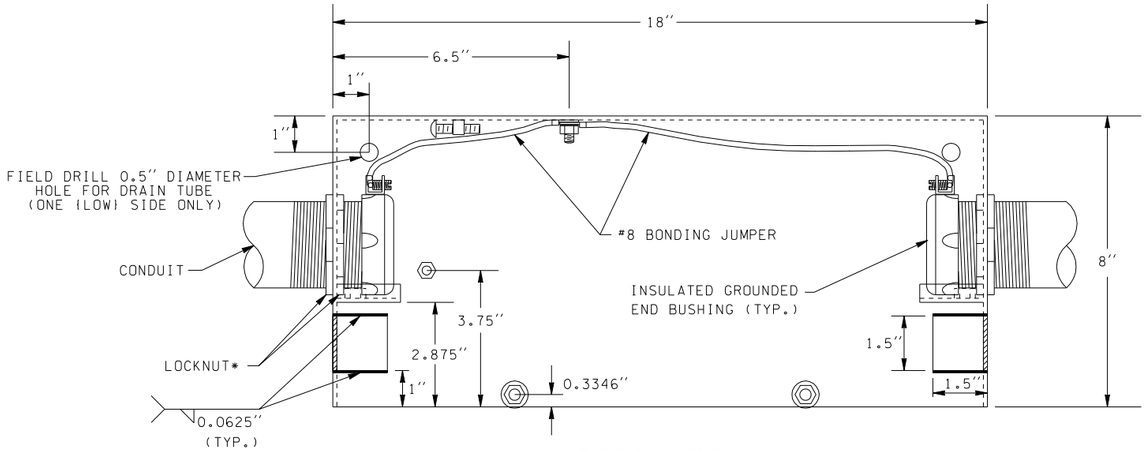


JUNCTION BOX
PLAN VIEW

* USE THIS METHOD FOR EVERY CONDUIT ENTERING JUNCTION BOX. FIELD DRILL OR PUNCH HOLES FOR CONDUIT WHILE MAINTAINING CONCRETE TIGHT ENTRANCE.

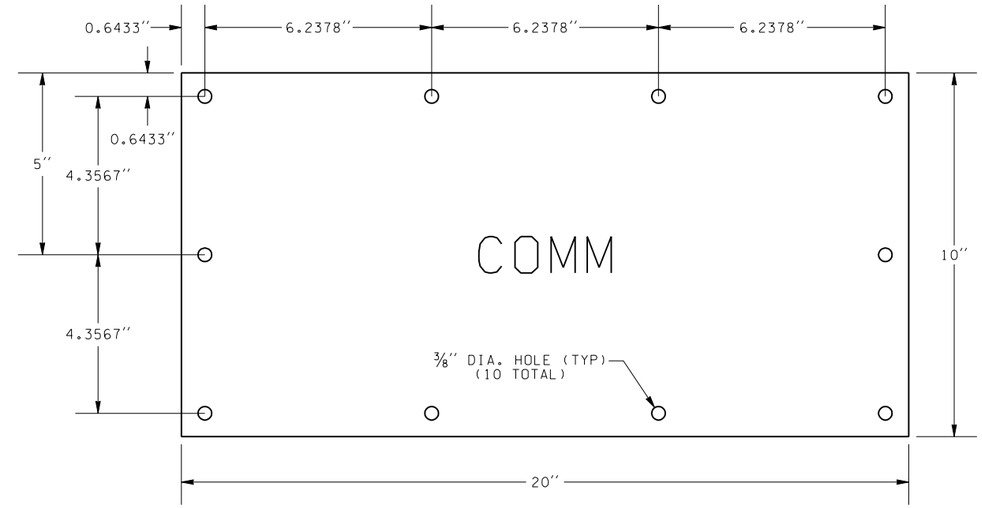


PERMANENT COVER
12 GUAGE TYPE 304 STAINLESS STEEL WITH #4 FINISH

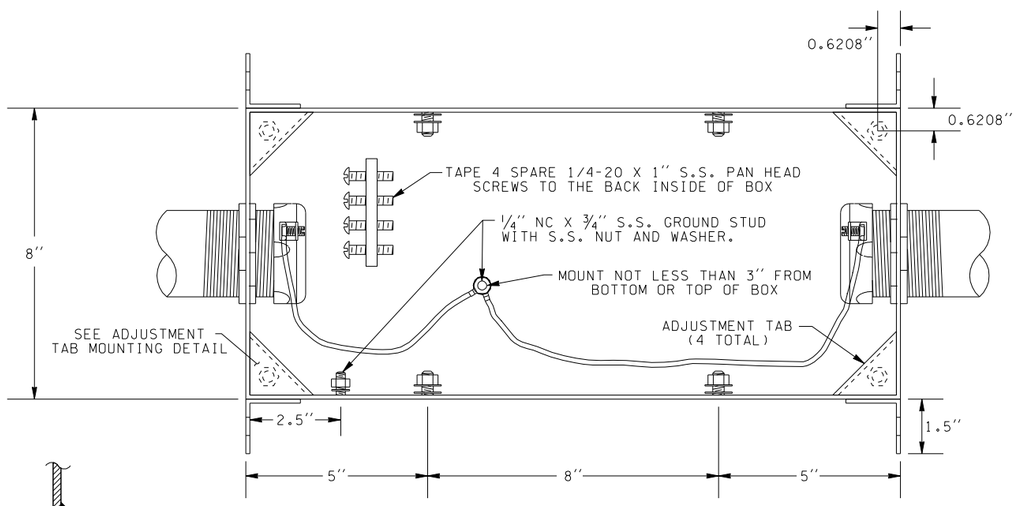


JUNCTION BOX
PROFILE VIEW

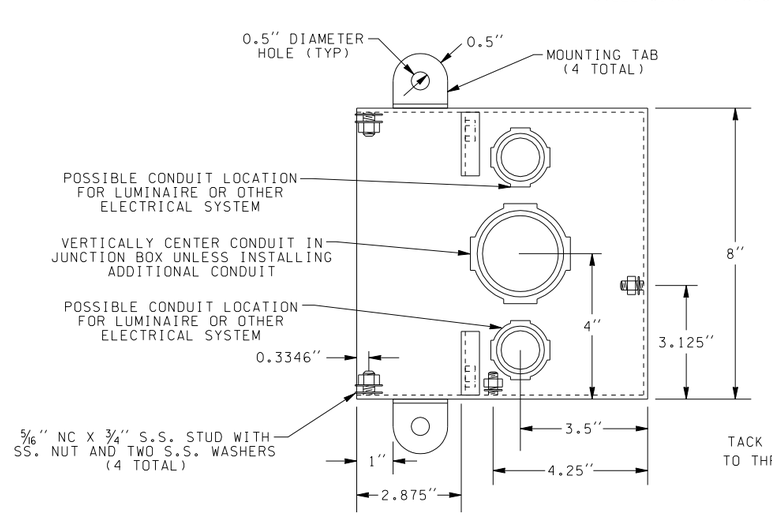


JUNCTION BOX
SIDE VIEW

CONDUITS SHALL BE VERTICALLY ALIGNED. CONDUITS SHALL BE PLACED WITH EQUIDISTANCE FROM ADJACENT CONDUITS TO JUNCTION BOX WALLS

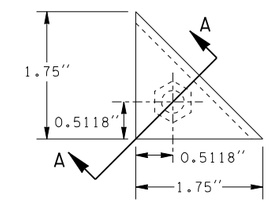


ADJUSTMENT TAB DETAIL

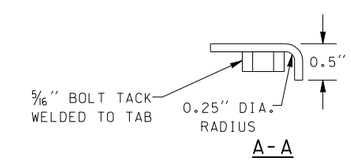


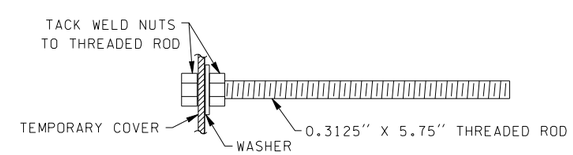


ADJUSTMENT BOLT DETAIL

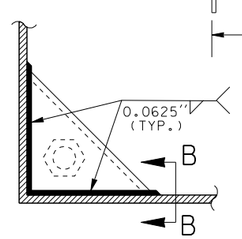


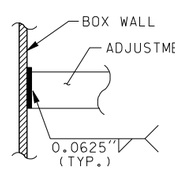


B-B

ADJUSTMENT TAB MOUNTING DETAIL

# NEMA 3R ADJUSTABLE FLUSH MOUNT JUNCTION BOX

TYPE 304 STAINLESS STEEL, WELDED SEAM CONSTRUCTION
12 GUAGE BOX WITH #2B FINISH
12 GUAGE ADJUSTMENT TABS
12 GUAGE MOUNTING TABS

| | | | | | | | | | |
|---|---|---|---|---|---|---|---|---|---|
| FILE NAME | S:\414126\Electrical\MASTER_FILES\DETAILS working copies\Adjflsjb.dgn | | | | REGION NO. | STATE | FED.AID PROJ.NO. | Washington State Department of Transportation | PLOT1 |
| TIME | 07:14:20 AM | | | | 10 | WASH | | ENGLISH | 6.21E |
| DATE | 06/21/2005 | | | | JOB NUMBER | | | | SHEET |
| PLOTTED BY | trinhha | | | | | | | | OF |
| DESIGNED BY | | | | | CONTRACT NO. | | LOCATION NO. | NEMA 3R ADJUSTABLE JUNTION BOX | SHEETS |
| ENTERED BY | | | | | | | | | |
| CHECKED BY | | | | | | | | | |
| PROJ. ENGR. | | | 1-24-05 | | | | | | |
| REGIONAL ADM. | | REVISION | DATE | BY | | | | | |

P.E. STAMP BOX — DATE

P.E. STAMP BOX — DATE